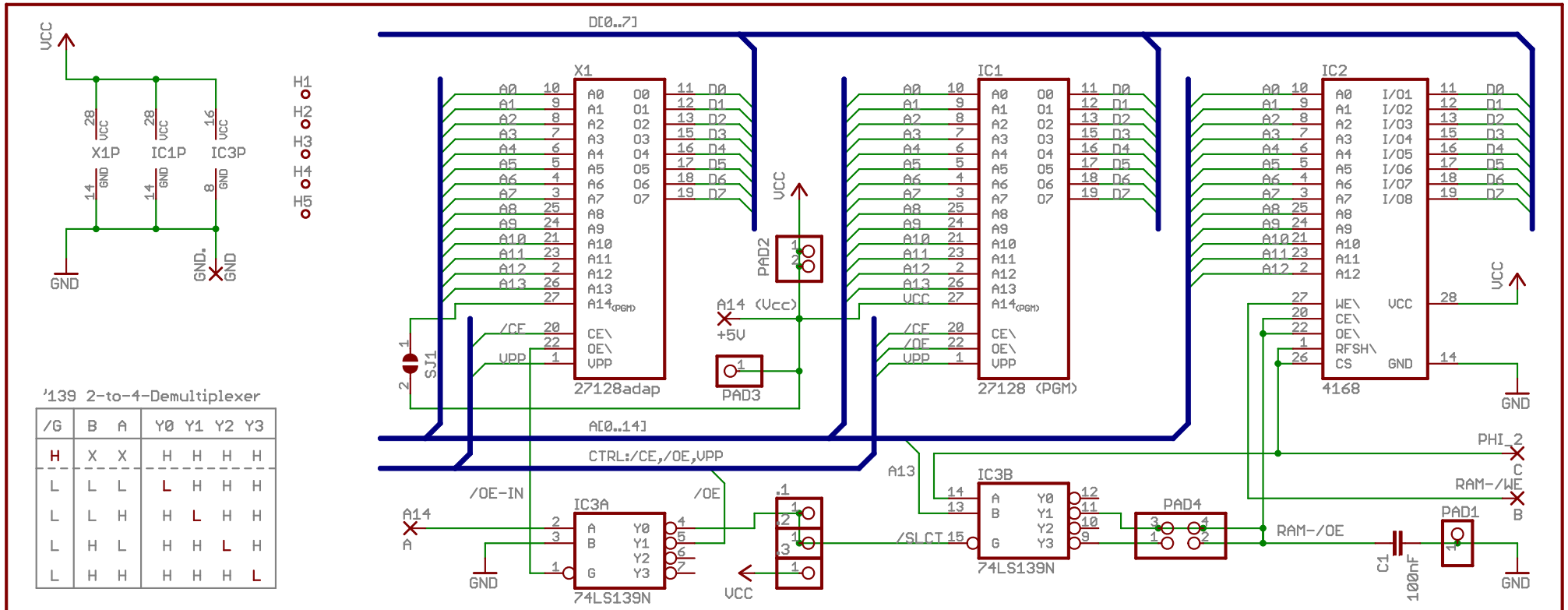

'139 2-to-4-Demultiplexer

/G	B	A	Y0	Y1	Y2	Y3
H	X	X	H	H	H	H
L	L	L	L	H	H	H
L	L	H	H	L	H	H
L	H	L	H	H	L	H
L	H	H	H	H	H	L

IC3A

/OE-In	A	ROM-/OE	/SLCT	Description
0	0	1	0	if /OE-In activated (low) and A is low, then the internal selection signal becomes active (low)
0	1	0	1	if /OE-In activated and A is high, then the replaced ROM chip becomes active (/OE == low)
1	X	1	1	if /OE-In is not active, no internals are active

IC3B

/SLCT	A13	C	RAM-/OE	(Y3)	Description
0	0	0	1	1	Y0 selected, but nothing else (explicit RAM refresh due to PHI_2 low)
0	0	1	0	1	if the internal /SLCT line and A13 are low, then RAM-/OE becomes active (low)
0	1	0	1	1	Y2 is selected, but nothing else
0	1	1	1	0	Y3 is selected, but nothing else (explicit RAM refresh due to PHI_2 low)
1	X	X	1	1	nothing is selected

C=1541C / C=1541-II insertion/configuration

A15	A14	A13	/OE-In =!A15	A =A14	Address	Description
0	X	X	1	X	$0000..$7FFF	RAMBoard not selected
1	0	0	0	0	$8000..$9FFF	RAM selected
1	0	1	0	0	$A000..$BFFF	no selection, open address space
1	1	X	0	1	$C000..$FFFF	ROM selected (16KB)

Capacitor C1 may be removed and line C connected to Vcc, if PSRAM is replaced by SRAM (e.g. 6264)

Pseudo static RAM (dynamic RAM in SRAM package) alternatives:
NEC µPD4168C-15, Matsushita MN4364-15
Inmos IMS2630P-15, Intel D2187A-25

TITLE: CLD-RAMBOard-2C-020

Document Number: REV:

Date: 09.07.2006 12:14:26 Sheet: 1/1

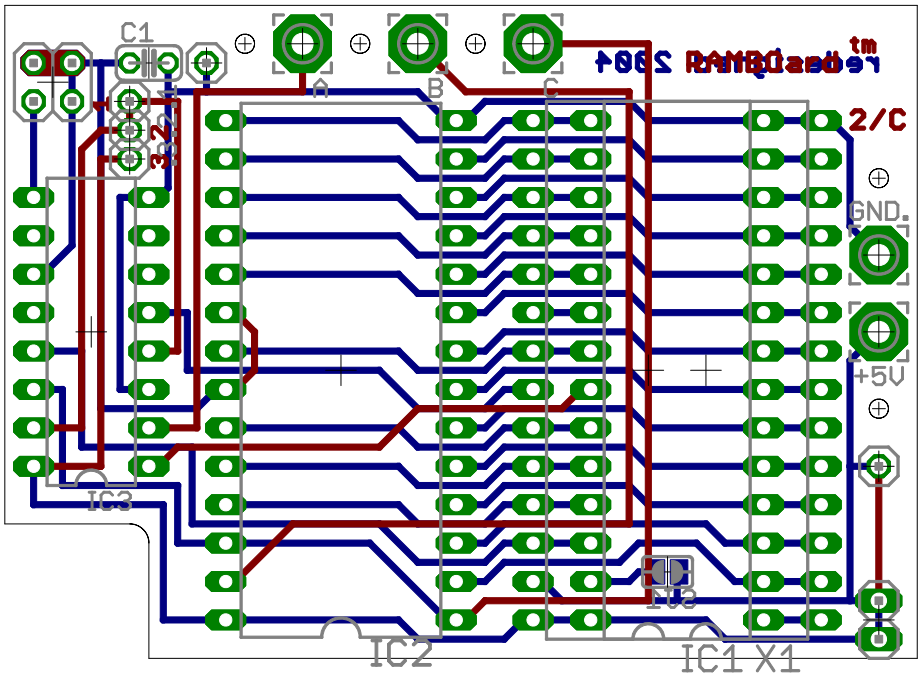

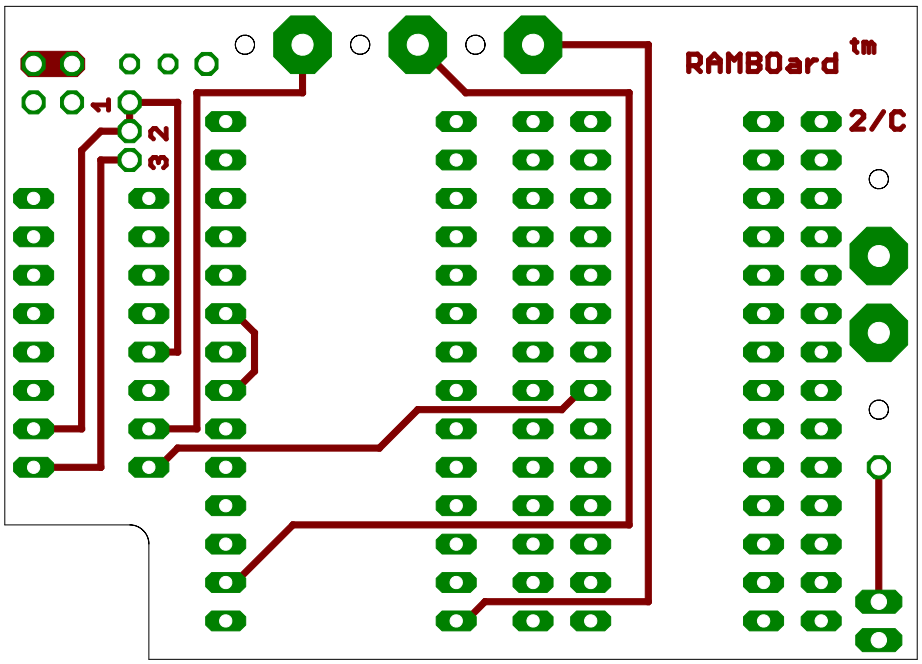

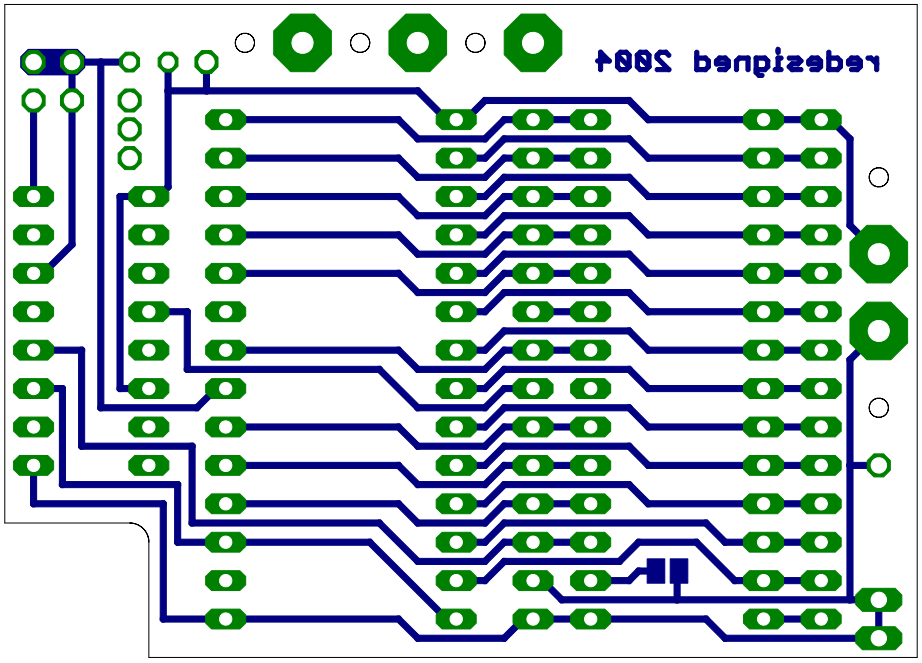

09.07.2006 12:47:01 f=2.00 F:\Develop\Eagle\projects\RAMBOard\1541_2_C\CLD-RAMBOard-2C-020.brd